Client: _____

Event Name: _____

Date & Time: _____

Prepared By: _____

Sulzberger Parlor

Panel Capacity: 70

W
S N
E

Set Up Notes:

A) 70 chairs lecture style, facing Broadway.
B) 2, 6' tables draped in blue cloth and skirted for panel.
C) 4 chairs behind panel tables.
D) Podium next to panel tables.
E) 2 large oak tables and 1 wooden coat rack along west wall and a baby grand piano and harpsichord on the south wall.
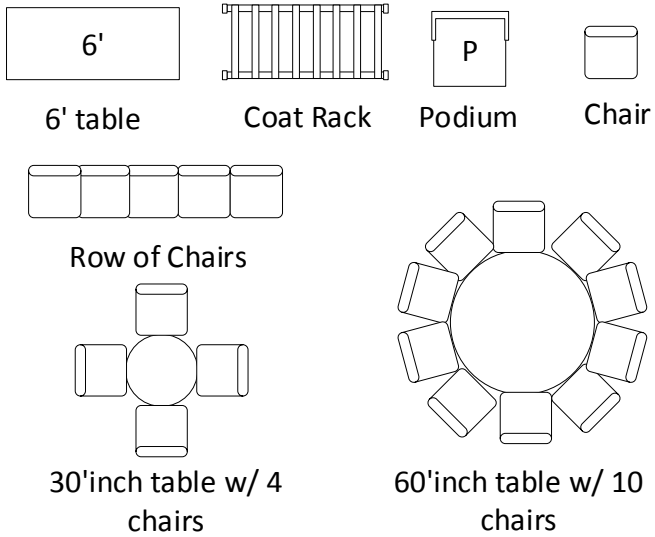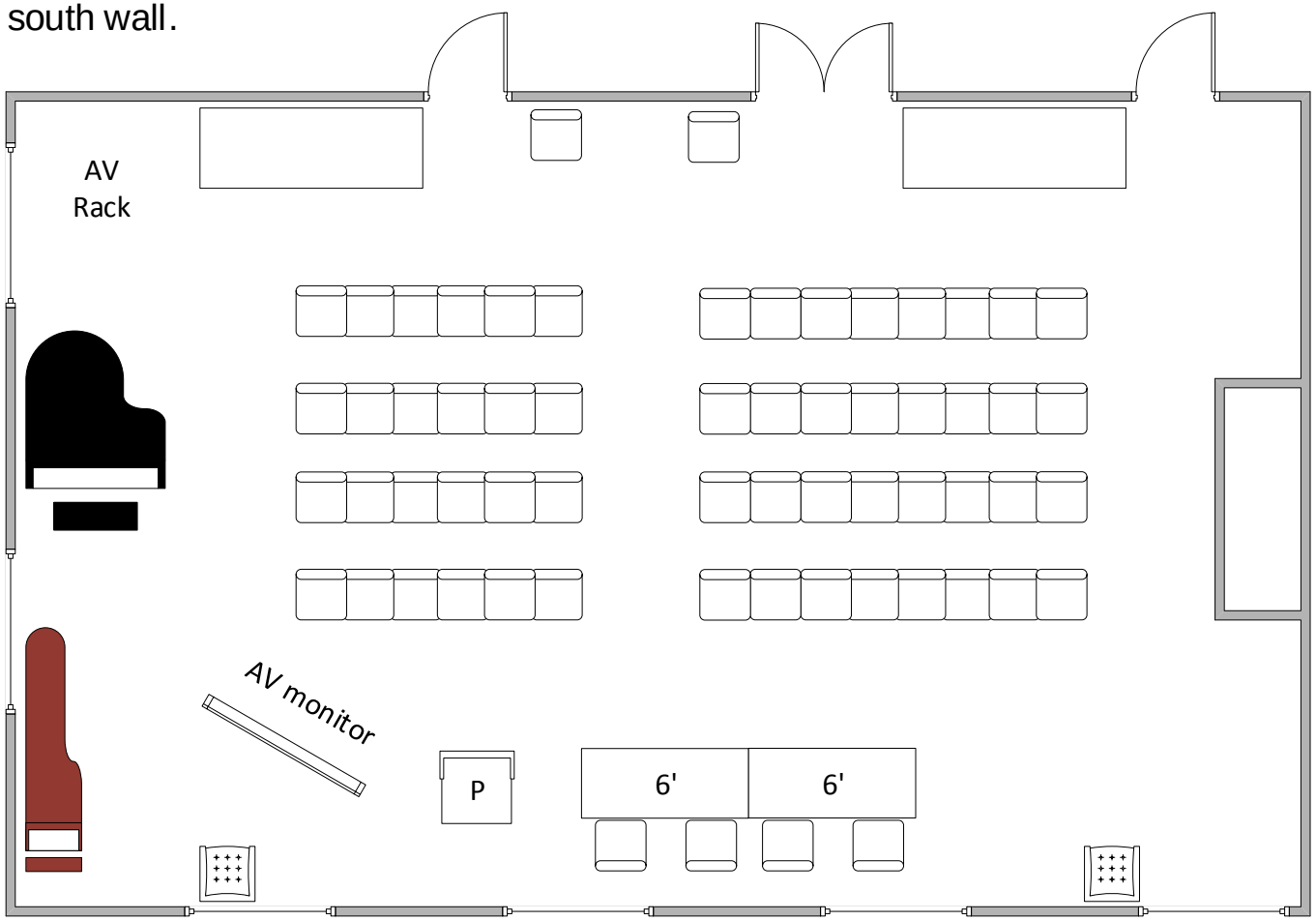
Diagram Key: